USE OF THE NO. 126 CONSOLE CONNECTOR KIT WITH MODELS
120, 120C, 125, 145, 147, 147RV, 225, 247 and 247RV LESLIE SPEAKERS

STANDARD PROCEDURE -- For All Organs

1. Remove back covers, take out shipping blocks from amplifier and from both tremolo motors. Replace backs and attach the 3D-foot connecting cable to the amplifier.

2. Attach tremolo and echo controls to the wooden rail directly in front of the lower manual by choosing the two mounting holes on each control case which best center the wood screws in the rail. Locate controls together at either end, or with one at each end.

3. Pass control cables through openings to inside of console; openings may be found in bottom side of lower manual, on left-hand side behind lower manual, or in corner of knee panel. If only a "cable size" hole is provided, cut cables near the plug ends, strip 1/2 inch, pass through opening, then reconnect using wire nuts. If no opening is provided, drill a 7/8 inch hole in the shelf below the cheek block under the lower manual.

4. Locate the No. 26-1 Console Connector Chassis inside organ at a convenient point, making sure that connector adapter and control cables will reach. Fasten the chassis in place using the wood screws which are provided.
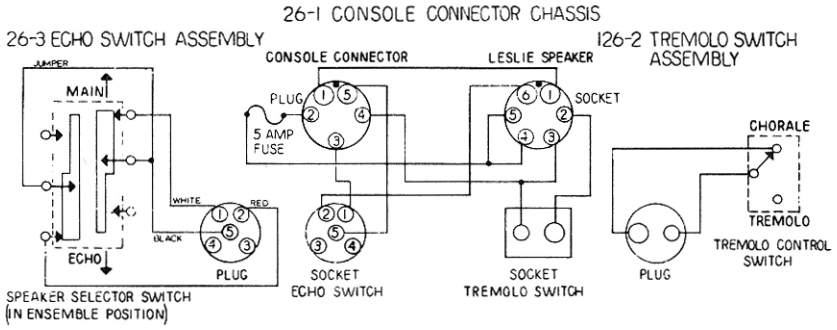
5. Connect Leslie Console Adapters to 26-1 Chassis. Adapter installation instructions are provided with adapter.